NOTES:
RCD: (xxx+/-.xxx) STD: .xxx+/-.xxx(ST) Key Dimension: *
1 RCD: Required Control Dimension ,These Dimensions need Process control & capability(initial and ongoing), 100%inspection, poke yoke, etc.as appropriate.
2 STD: Statistically Toleranced Dimension ,These Dimensions need demonstration of ongoing process capability (CpK/PpK).
3 Key Dimension:These Dimensions are defined by ME/Mfg,and need inspection as appropriate. If you want more information,please review the criterions of <TC-RDW-18>and<TC-QAW-40>

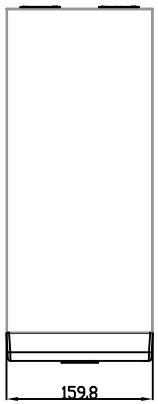

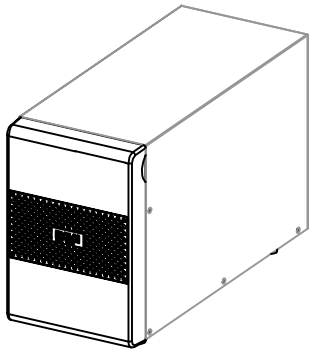

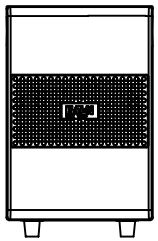

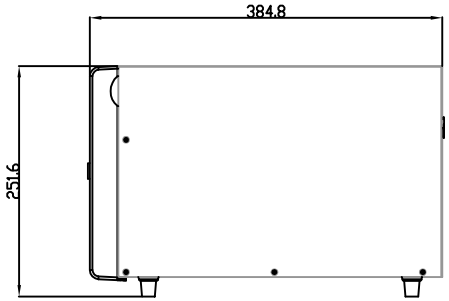

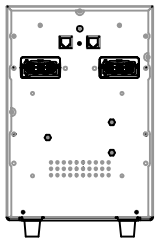

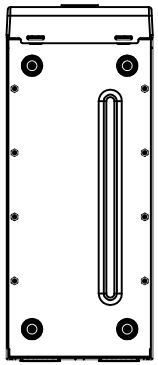

METRIC	THIRD ∠ PROJECTION	EATON CORPORATION	EATON

DIMENSIONS ARE IN MILLIMETERS AFTER PLATING, DIMENSIONS AND TOLERANCES IN ACCORDANCE WITH ASME Y14.5M-1994. SEE NOTES FOR TOLERANCES.

DESCRIPTION:

DESIGNATED: Daniel Tan		ECO:	NAME: 9SX Tower 48V EBM OUTLET DRAWING	REVISION:	SIZE: A2
MODIFIED: Daniel Tan					SCALE: 1:1
CHECKED:		DOCUMENT TYPE: PRO-E DRAWING		STATE:	
SAFETY:					SHEET: 1 OF 1
APPROVED:					

EATON CORPORATION - CONFIDENTIAL AND PROPRIETARY
NOTICE TO PERSONS RECEIVING THIS DOCUMENT AND/OR TECHNICAL INFORMATION
THIS DOCUMENT, INCLUDING THE DRAWING AND INFORMATION CONTAINED THEREON, IS CONFIDENTIAL AND IS THE EXCLUSIVE PROPERTY OF EATON CORPORATION AND IS MERELY ON LOAN AND SUBJECT TO RECALL BY EATON AT ANY TIME. ALL RIGHTS PERTAINING TO THIS DOCUMENT, THE DRAWING CONTAINED THEREON AND ANNEX THEREOF THAT MAY BECOME COPYRIGHTABLE, IN THE JURISDICTION OF EATON AND THAT IS PROVIDED BY THIS DOCUMENT MAY BE COPIED OR OTHERWISE REPRODUCED WITHOUT THE PRIOR WRITTEN CONSENT OF EATON. IN THE CASE OF COMPLETION CONTRACTUAL PROVISIONS, THIS NOTICE SHALL GOVERN THE STATUS OF THIS DOCUMENT.
© 2006 Eaton Corporation - All Rights Reserved

TC-RDW-49-19 REV E

Users E2019187(Xu, Fry) 2018/3/30 11:46:05